Https:www.hbfortis.com

Email:sale@hbfortis.com

Whatsapp:+8618510333962

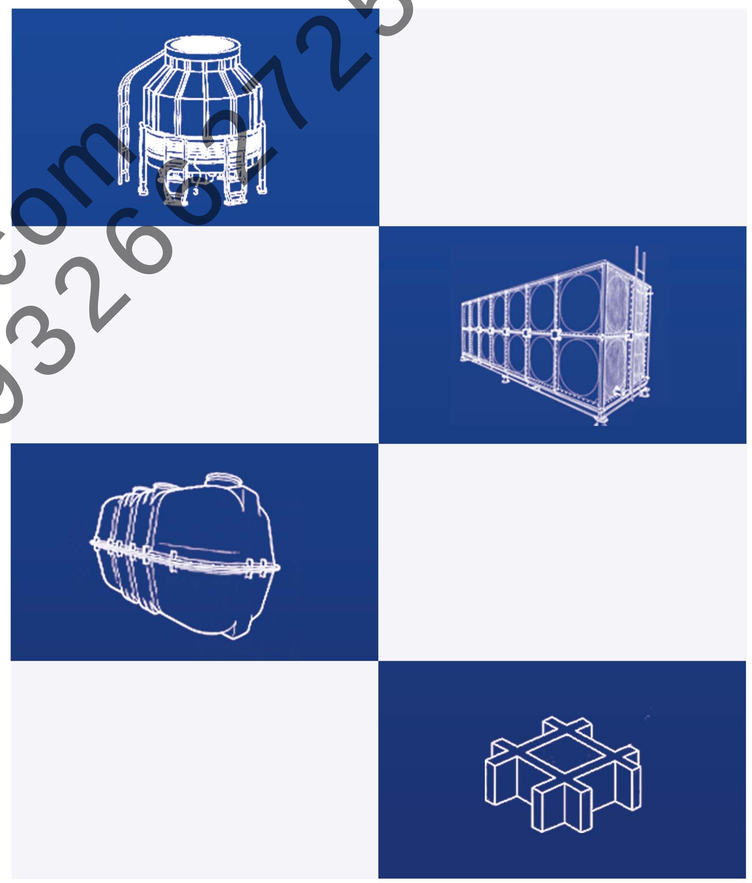

Fortis Technology

Glass Fiber Reinforced Plastic

Hebei Fortis Technology Co., LTD

www.hbfortis.com
whatsapp:+86 18932666725

1 Factory equipment scale

Our factory have 33 FRP production lines, including 8 winding production lines, 11 pultrusion production lines and 9 compression molding production lines. OEM/ODM customization services are available.

2 Qualification certification

Products have passed rigorous testing by the FRP product quality inspection center and meet national standards GB/T 21238-2016, GB/T 31537-2015, and GB 50608-2020.

About Us

Hebei Fortis Technology Co., Ltd. is located in Zaoqiang County, Hebei Province, the core hub of China's composite materials industry. With over 20 years of experience in composite manufacturing, we operate 33 modern FRP production lines and are dedicated to the research, development, and manufacturing of advanced composite materials.

We maintain long-term and stable cooperative relations with many domestic and foreign partners, with strong resource integration and supply chain management capabilities, can provide customers with one-stop service from demand analysis, product orientation, research and development, manufacturing to logistics delivery and after-sales support. Customer satisfaction is our top priority, and we adhere to professional technology and strict quality control to ensure that every product meets customer requirements and environmental standards.

With the global market demand for composite materials continues to escalate, we believe that customer and market feedback is the core driving force behind the continued advancement of new materials technologies. For this reason, we continuously track industry trends, actively innovate, and are committed to bringing higher quality and more environmentally friendly composite products to market.

In addition, to help customers achieve local production and reduce operating costs, we also provide services such as sales, installation and commissioning, operation training, and after-sales maintenance of glass and steel composite production equipment. Through equipment output and technology empowerment, we effectively help customers reduce cross-border transportation costs and improve their responsiveness in regional markets.

www.fortis.com
whatsapp:+8613202602725

Glass Fiber Reinforced Plastics

Your Partner in Custom Manufacturing.

- Lightweight and high strength
- Corrosion resistant
- Good insulation
- Environmental friendly
- Strong plasticity

www.hbftgrp.com
whatsapp:+86 18932662225

www.hbfortis.com
whatsapp:+86 18932669775

Traffic

Our company specializes in the research, manufacturing, and sales of high-performance fiberglass products for the transportation sector, including signboards, marker posts, fire-resistant panels, composite covers, anti-glare panels, sound barriers, manhole covers, and other related solutions. These products are widely used in highways, municipal roads, rail transit systems, bridges and tunnels, ports and terminals, and transportation hubs—providing comprehensive solutions for safety protection, route identification, facility maintenance, and infrastructure construction.

Featuring high strength, corrosion resistance, aging resistance, flame retardancy, electrical insulation, lightweight structure, easy installation, and low maintenance cost, our products are designed to meet the diverse needs of different regions, environments, and engineering standards. In accordance with transportation industry regulations and actual project requirements, we offer customized design, tailored production, on-site installation and commissioning, and long-term technical support services.

Marker post

Manhole cover

Marking sign

Anti-glare panel

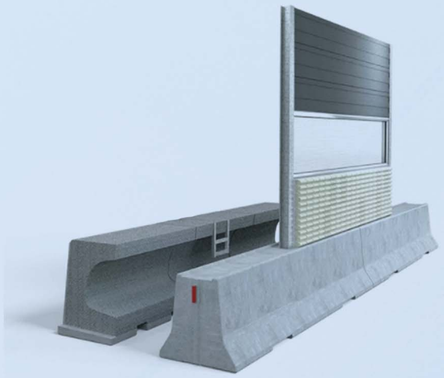

Acoustic barrier

High-speed barrier

www.hbfortis.com
whatsapp:+86 18932662725

Power

Our company has long been committed to the research, manufacturing, and supply of fiberglass auxiliary products for the power industry. Our main product portfolio includes utility poles, crossarms, meter boxes, cable trays, cable brackets, bird guards, safety helmets, and other supporting equipment. These products are widely applied in transmission line construction, distribution network upgrades, substation projects, renewable energy facilities, municipal utility corridors, as well as urban and rural power grid development—providing integrated support for power engineering projects.

Fiberglass products offer exceptional corrosion resistance, electrical insulation, impact resistance, weatherability, and flame-retardant performance. With a lightweight yet high-strength structure, they ensure easy installation and long service life. In accordance with industry standards and on-site operating conditions, we provide one-stop services including customized design, structural optimization, manufacturing, transportation, installation, and after-sales technical support.

Electric pole

Electric meter room

Electric meter cabinet

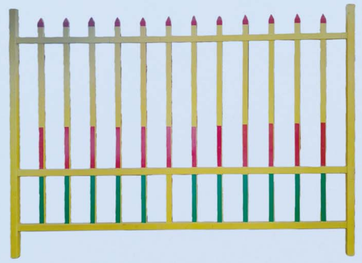

Fencing

Cable trough

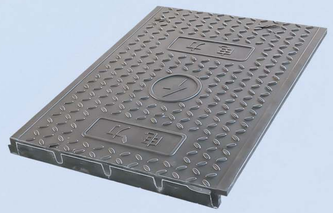

Power cover plate

www.hportis.com
whatsapp:+86 18932662725

Industrial Chemicals

Our company is deeply engaged in the application of fiberglass products within the industrial and chemical sectors. Our main product range includes cooling towers, storage tanks, fiberglass gratings, pipelines, fences, structural beams, fiberglass rebar, angle profiles, and wastewater treatment covers, among other equipment and components. These solutions are widely used in chemical plants, petroleum refining, metallurgy, electroplating, pharmaceuticals, papermaking, food processing, textile dyeing, wastewater treatment, and seawater desalination—ensuring reliable support for workplace safety, environmental protection, and long-term stable industrial operations.

Fiberglass materials offer outstanding corrosion resistance, moisture resistance, chemical durability, flame retardancy, electrical insulation, lightweight strength, and low maintenance costs. They are particularly suitable for harsh conditions such as acidic and alkaline environments, salt-spray coastal regions, high-temperature corrosive settings, and heavy-load operations. Based on medium characteristics, pressure requirements, structural specifications, and on-site layouts, our company provides full-cycle support including engineering design, technical consultation, customized manufacturing, installation and commissioning, technical services, and long-term maintenance assurance.

Cooling tower

Cooling tower

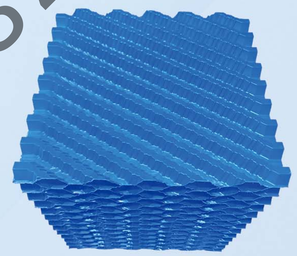

Cooling tower fillings

Storage tank

Stairs

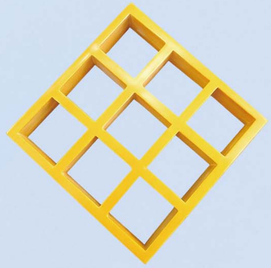

Grating

www.hbfortis.com
Whatsapp: +86 18932662725

Agriculture

Our company is deeply engaged in the application of fiberglass products within the industrial and chemical sectors. Our main product range includes cooling towers, storage tanks, fiberglass gratings, pipelines, fences, structural beams, fiberglass rebar, angle profiles, and wastewater treatment covers, among other equipment and components. These solutions are widely used in chemical plants, petroleum refining, metallurgy, electroplating, pharmaceuticals, papermaking, food processing, textile dyeing, wastewater treatment, and seawater desalination—ensuring reliable support for workplace safety, environmental protection, and long-term stable industrial operations.

Fiberglass materials offer outstanding corrosion resistance, moisture resistance, chemical durability, flame retardancy, electrical insulation, lightweight strength, and low maintenance costs. They are particularly suitable for harsh conditions such as acidic and alkaline environments, salt-spray coastal regions, high-temperature corrosive settings, and heavy-load operations. Based on medium characteristics, pressure requirements, structural specifications, and on-site layouts, our company provides full-cycle support including engineering design, technical consultation, customized manufacturing, installation and commissioning, technical services, and long-term maintenance assurance.

Water tank

Septic tank

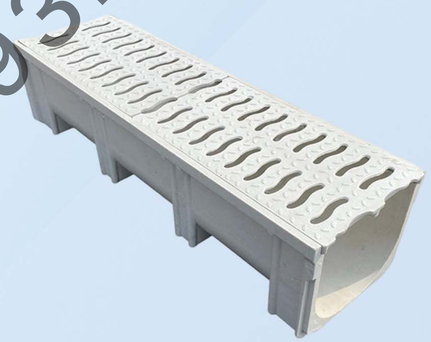

Drainage

Vegetable rack

Roof surface

Mesh

www.hbiortis.com
whatsapp:+86 18932662725

Water treatment

Our fiberglass products are widely applied in farmland drainage and water storage systems, rural wastewater treatment projects, greenhouse roofing and facility agriculture structures, vertical planting of fruits and vegetables, environmental treatment in livestock farming, and rural public infrastructure construction. The main product portfolio includes fiberglass drainage channels, septic tanks, water storage tanks, roofing panels, seedling and cultivation racks, agricultural protection meshes, and other supporting solutions.

Featuring excellent corrosion resistance, aging resistance, impermeability, strong weatherability, lightweight structure, easy installation, and long service life, fiberglass products can withstand diverse agricultural environments—such as irrigation systems, stormwater and sewage diversion, fertilizer-induced corrosion, high-temperature humidity, and prolonged outdoor exposure. Based on agricultural planning and on-site construction conditions, we provide one-stop services including customized sizing, structural design, manufacturing, transportation and hoisting, installation guidance, and after-sales support.

Water tank

Membrane housing

Composite pressure vessel

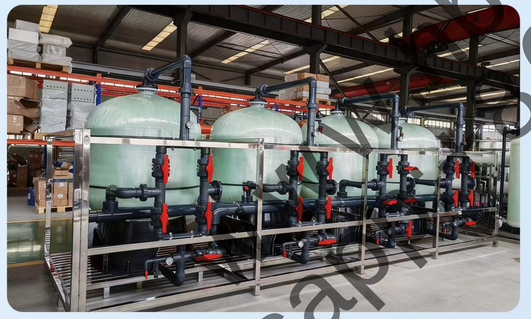

www.bfortis.com
whatsapp +86 18932662725

Grating

Product	FRP grating

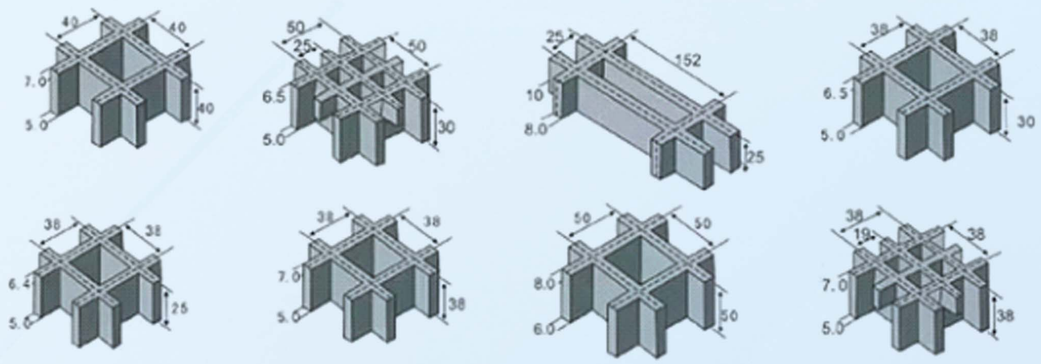

Type	Mesh size(mm)	Thickness(mm)	Length×Width(mm)
FT-G3825a	38×38	25	1220×3660
FT-G3825b	38×38	25	1225×4005
FT-G3830a	38×38	30	1220×3660
FT-G3830b	38×38	30	1225×4005
FT-G3838a	38×38	38	1220×3660
FT-G3838b	38×38	38	1225×4005
FT-G3840a	38×38	40	1220×3660
FT-G3840b	38×38	40	1225×4005
FT-G3850a	38×38	50	1220×3660
FT-G3850b	38×38	50	1225×4005

Features

This solution offers comprehensive advantages in corrosion resistance, insulation, lightweight construction, and safety. While FRP grating doesn't replace metal grating in every scenario, it emerges as the most cost-effective and reliable option when corrosion is a primary concern or specialized requirements for insulation, lightweight performance, and safety are critical. The material's long service life and low maintenance costs make it an ideal choice for these applications.

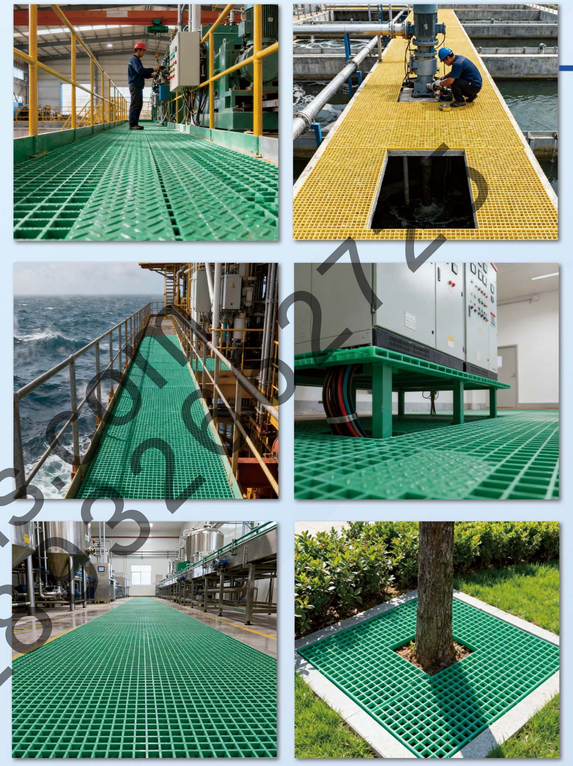

Application Scenarios

1.Petrochemical, pharmaceutical, paper, food processing plants: used as operating platform, stair tread, equipment walkway, trench cover plate, etc., to resist chemical splashing and corrosive atmosphere.

2.Sewage treatment plant, offshore platform: used as inspection walkway and grille cover plate, perfectly resistant to corrosion of seawater, hydrogen sulfide and humid environment.

3.Power plant, substation and electrical equipment room: used as cable trench cover plate and equipment inspection channel to ensure the safety of personnel using electricity.

4.Offshore oil platform, ship deck: anti-slip, light, resistant to seawater corrosion.

5.Food and beverage factory, slaughterhouse, clean workshop: FRP grid is pollution-free, easy to clean, no bacteria breeding, meet the hygienic requirements.

6.Landscape: used as tree pit cover plate, water boardwalk.

7.Municipal engineering: used as trench cover plate, pedestrian bridge pavement.

Lightweight and high strength / Corrosion resistant / Good insulation / Strong plasticity

www.hbfortis.com
whatsapp:+86 18032828272

Pultruded Profiles

Product	FRP Fence	

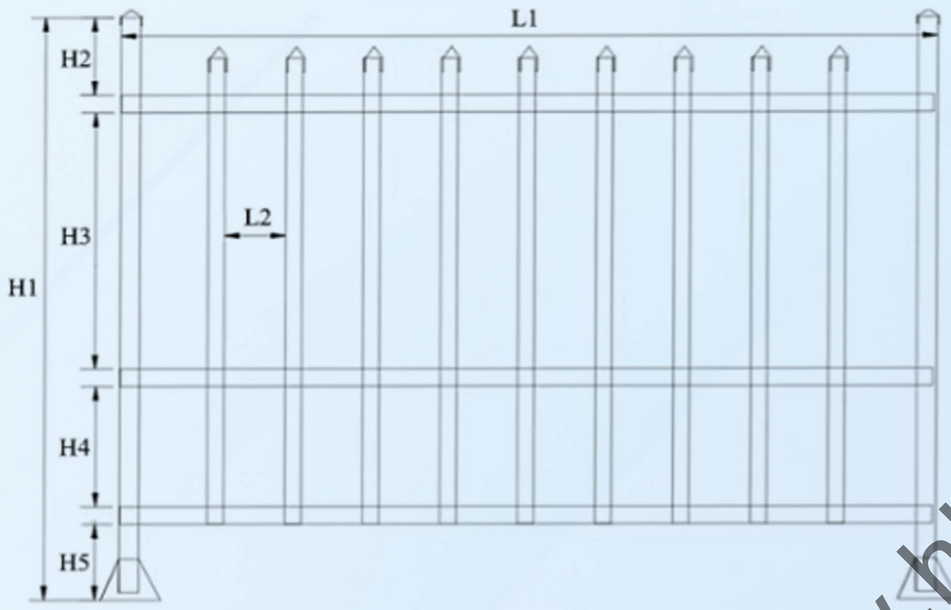

Model	Dimension(mm)H1×H2×H3×H4×H5	Dimension(mm)L1×L2
FT-F	Customized	Customized
Features	Excellent corrosion resistance, low maintenance cost, light weight and high strength, electric insulation	
Application	Chemical and petroleum industry: Isolation around chemical plants, oil refineries, chemical storage areas.	
	Power industry: protection of substations, power plants, high voltage towers and transformer areas.	
	Sewage treatment and water supply: guardrail around sewage treatment tank, pump station and waterworks.	

Application Scenarios

1.Electromagnetic sensitive environment: Hospital MRI (nuclear magnetic resonance) scanning rooms, radio wave darkrooms for research institutions, airport radar towers.

2.Corrosive industrial environments: Main beams and secondary beams used as platforms, corridors, or equipment supports in chemical plants, sewage treatment plants, and electroplating plants, supporting FRP grates or wooden boards. In marine aquaculture and dock facilities, truss structures are constructed as support frameworks to support work platforms or cage systems.

3.Secondary components of infrastructure: Solar photovoltaic panel brackets are used in areas with strong corrosion, such as tidal flats and coastal areas.

4.Electrical insulation structure: used for making live working tools (such as insulated rods), transformer fences.

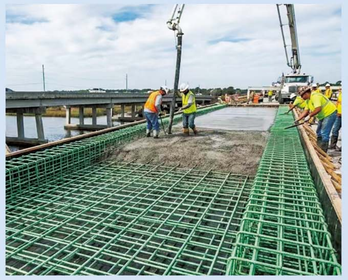

Lightweight and high strength / Corrosion resistant / Good insulation / Strong plasticity

www.hbfortis.com
whatsapp:+86 18132662720

Storage Tank

Product	Horizontal Storage Tank

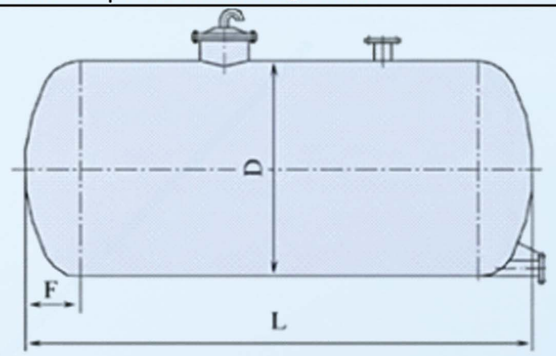

F=D/4

Model	Volume(m3)	Diameter(mm)	Height(mm)	Number of Supports N1
FT-HST1	1	1000	1450	2
FT-HST2a	2	1000	2730	3
FT-HST2b	2	1200	1990	2
FT-HST2c	2	1400	1560	2
FT-HST3a	3	1000	4010	4
FT-HST3b	3	1200	2870	2
FT-HST3c	3	1400	2200	2
FT-HST4a	4	1200	3760	3
FT-HST4b	4	1400	2850	3
FT-HST5	5	1400	3500	3
FT-HST6	6	1600	3300	2

Features: The FRP Storage Tank serves as a cornerstone solution that delivers safe, reliable, long-lasting, and nearly maintenance-free storage in highly corrosive environments. Rather than being merely a metal substitute, it represents an economically and performance-optimized technical choice where corrosion control is paramount. Its value lies in ensuring storage safety, maintaining medium purity, and achieving minimal long-term maintenance costs-making it an indispensable piece of critical equipment in modern industrial applications.

FRP Pipe

Product	FRP pipe

Model	Inner.dia(mm)	Length(mm)	Channel Thickness(mm)		
			P=0.6Mpa	P=1.0Mpa	P=1.6Mpa
FT-Pp10	10	1800	4.6	4.6	4.6
FT-Pp15	15				
FT-Pp20	20				
FT-Pp25	25				
FT-Pp32	32				
FT-Pp40	40				
FT-Pp50	50	6000			
FT-Pp2100	2100	12000	22.8		
FT-Pp2400	2400		25.4		
FT-Pp2600	2600		26.7		
FT-Pp3000	3000		30.6		
FT-Pp3300	3300		33.2		
FT-Pp3600	3600		35.8		
FT-Pp4000	4000		39.7		

Features: The FRP pipe delivers a high-performance transportation solution that outperforms conventional pipelines in resisting corrosion, scaling, weight, and durability challenges. Its value lies not in initial cost savings, but in its extended lifespan, minimal maintenance requirements, and operational efficiency that drive lower lifecycle costs. This makes FRP piping the ideal choice for safe, reliable, and cost-effective operations in demanding industrial, municipal, and marine environments.

www.hbfortis.com
whatsapp:+86 18932662725

Utility Pole

Product	FRP Utility pole / telephone pole	
Category	Item	Performance Requirements
Mechanical Properties	Tensile Strength	=500 MPa
	Flexural Strength	=500 MPa
	Compressive Strength	=300 MPa
Physical Properties	Flame Resistance	V-1/0 Grade
Chemical Resistance	Acid Resistance (80°C, 5wt% HCl solution, 28 days)	No powdering, no cracks, flexural modulus retention rate=80%
	Alkali Resistance (80°C, 10wt% NaOH solution, 7 days)	No powdering, no cracks, flexural modulus retention rate=50%
	Salt Resistance (80°C, 3wt% NaCl solution, 28 days)	No powdering, no cracks, flexural modulus retention rate=85%
Aging Resistance	Artificial Climate Aging (Method A-1, irradiance, cycle 1, 300h)	No powdering, no cracks, flexural modulus retention rate=85%
	Hygrothermal Aging (60°C, 93%RH, 12h~25°C/93%RH, 28 days)	No powdering, no cracks, flexural modulus retention rate=85%
	Constant Humidity and Heat Aging (60°C/93%RH, 28 days)	No powdering, no cracks, flexural modulus retention rate=85%
	High-Temperature Resistance (300°C~400°C)	No powdering, no cracks, flexural modulus retention rate=80%
Electrical Properties	Surface Resistivity	=1.0×10^10 Ω
	Volume Resistivity	=1.0×10^10 Ω?m
Density	solid	=0.25 g/cm³
	hollow	=2 g/cm³
Model / Length(mm)	Diameter(mm)	Weight(kg)
FT-UP / Customized	Customized	Customized
Features	The fiberglass composite pole has three key advantages over traditional poles: first, full insulation greatly boosts relative insulation distance, effectively preventing lightning-caused safety accidents. Second, it is light yet strong—its composite material has 1/4 the density of steel, yet over 500Pa strength to bear heavy loads; bending deformation fully recovers after unloading, with no impact on later use. Third, it is highly durable: retaining high strength long-term in acid, alkali, salt and common solvents, no regular anti-corrosion work is needed, and its service life exceeds 40 years. These features make it reliable for various power infrastructure.	

Application Scenarios

1.Chemical and petrochemical industry: Storage of hydrochloric acid, sulfuric acid, alkali, process intermediates, corrosive wastewater.

2.Environmental protection and water treatment industry: Storage of sulfuric acid, hydrochloric acid (for pH adjustment), sodium hypochlorite and other water treatment agents.As a middle water tank and pure water tank, ensure that the water quality is not polluted.

3.High-Voltage Transmission Lines: Suitable for 110kV+ projects; full insulation avoids lightning-caused short circuits/power outages.

4.Water treatment and conveyance: Crude oil, brine, chemicals, process fluids, corrosive wastewater, Municipal water supply, swage treatment, desalination plant, Circulating water cooling pipe.

www.hbfortis.com
whatsapp:+86 18993266205

Cooling Tower

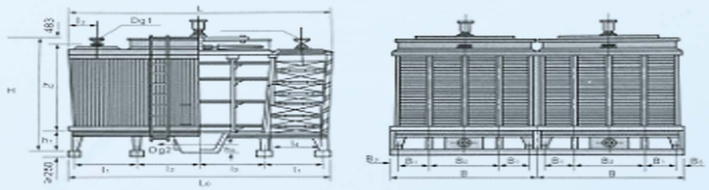

Product	Square Cross Flow Cooling Tower									
Model	t=28℃ Coolable water volume (m³/h) Δt=5℃	Main Dimensions (mm)		Air Volume m³/h	Fan Diameter (mm)	Motor Installed Capacity (kw)	Weight(t)		t=28℃ Coolable water volume (m³/h) Δt=10℃	Noise at standard point dB(A)
		Total Height	Length× Width				self-weight	operating weight		
FT-DSC300	300	4514	7250× 3810	167000	3400	7.5	5.85	13.38	/	59.0
FT-DSC500	500	5230	8033× 4650	260000	4200	11.0	9.2	17.24	/	61.5
FT-DSC700	700	5319	8930× 6640	370000	5000	18.5	12.95	26.05	/	62.6
FT-CDSC300	300	6230	10650× 3810	167000	3400	7.5	7.05	14.18	/	52.5
FT-CDSC500	500	7030	11640× 4650	260000	4200	11.0	10.8	18.84	/	53.7
FT-CDSC700	700	7180	12540× 6640	370000	5000	18.5	14.75	26.81	/	54.5
FT-ISC700	/	5319	8930× 6640	450000	5000	30.0	13.19	26.29	700	66.0

The standard point noise is measured at a distance equal to the equivalent diameter of the air inlet window or its shield equivalent diameter, and 1.5 meters above the ground. The equivalent diameter D? is calculated by the formula: $D? = 1.13 \times \sqrt{Length \times Width}$

Features	The FRP cooling tower serves not only as a temperature regulator but also delivers an efficient, durable, and maintenance-free solution with optimized lifecycle costs. By harnessing the unique properties of FRP materials, it fundamentally addresses the critical challenges of corrosion and lifespan limitations in harsh operating environments, making it the go-to choice for cooling systems in modern industrial and commercial facilities.

Cooling Tower

Product	Low Noise Type Counterflow Cooling Tower

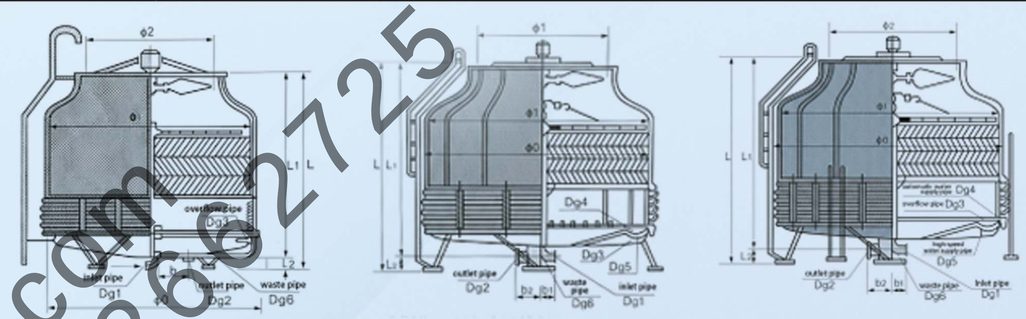

Model	t=27℃ Coolable water volume (m³/h) Δt=5℃	Main Dimensions (mm)		Air Volume m³/h	Fan Diameter (mm)	Motor Power (kw)	weight (kg)		inlet pressure 104Pa	noise at 10m dB (A)
		Total Height	Maximum Diameter				self-weight	operating weight		
FT-LC12	15	2033	1210	7200	700	0.6	206	484	1.96	40.3
FT-LC20	24	2123	1460	12400	800	0.8	230	514	2	41.1
FT-LC30	35	2342	1912	18000	1200	0.8	406	956	2.21	43.5
FT-LC40	46	2842	1912	21500	1200	1.1	478	1118	2.6	43.5
FT-LC50	57	2830	2215	28000	1400	1.5	596	1480	2.65	44.7
FT-LC60	68	3080	2215	32300	1400	1.5	642	1592	2.9	45.7
FT-LC70	79	3094	2629	39200	1600	2.2	790	2064	2.78	47
FT-LC80	92	3344	2629	43400	1600	2.2	875	2243	3.03	47.5

Features	The FRP cooling tower serves not only as a temperature regulator but also delivers an efficient, durable, and maintenance-free solution with optimized lifecycle costs. By harnessing the unique properties of FRP materials, it fundamentally addresses the critical challenges of corrosion and lifespan limitations in harsh operating environments, making it the go-to choice for cooling systems in modern industrial and commercial facilities.

www.hbfortis.com
whatsapp: +86 18932662725

Septic Tank

Product	FRP Septic Tank

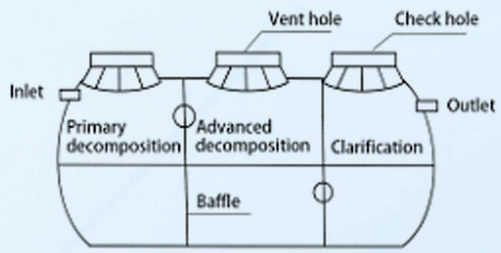

Model	Volume (m3)	External dimensions(mm) Length × Width × Height	Internal dimensions(mm) Length × Width × Height	Avg. Thickness (mm)	Weight (kg)
FT-STT1	1	1740×1000×1000	1640×900×896	3.5	58
FT-STT1.5	1.5	1880×1015×1230	1808×943×1150	5	95
FT-STT2a	2	2000×1270×1292	1900×1170×1192	5	100
FT-STT2b	2	2370×1162×1190	2289×1081×1090	7	138
FT-STT2.5a	2.5	2448.5×1268.5×1302	2364.5×1184.5×1202	7	180
FT-STT2.5b	2.5	2470×1280×1300	2380×1190×1200	7	180

Model	Accessories				
	partition plate	screws	rubber strip	rubber gasket	cover
FT-STT1	2	18 (F 6*25)	2.5	2 (F 110mm)	2 or 3
FT-STT1.5	2	38 (F 8*40)	3	0 (F 110mm)	/
FT-STT2a	2	28 (F 8*40)	3.5	2 (F 110mm)	2
FT-STT2b	2	64 (F 8*40)	3.5	1 (F 110mm)	3
FT-STT2.5a	2	68 (F 8*40)	4	0	3
FT-STT2.5b	2	56 (F 8*40)	4	1 (F 110mm)	3

Application Scenarios

1.Central air conditioning system: refrigeration station for commercial buildings, hotels and hospitals.

2.Power industry: auxiliary cooling system for thermal power plant and nuclear power plant.

3.Sewage treatment plant and municipal engineering: drainage around aeration tank and sedimentation tank, as well as drainage of sidewalks and plazas.

4.Applicable to the treatment and reuse of domestic sewage in residential districts, villages, towns, office buildings, shopping malls, hotels, restaurants, sanatoriums, government agencies, schools, military camps, hospitals, expressways, railways, factories, mines, tourist attractions and other places.

www.hbfortis.com
whatsapp:+86 18932660625

Textile

Product	FRP Two-way Cloth				
Model	Glass Type	Weave type	Fabric Weight(mm)	Width(m)	Roll length(m)
FT-TCP2 FT-TCP7 FT-TCP11	E-Glass	Plain woven	0.26mm 0.7mm 1.1mm	0.92m 1m	50m 100m 150m 200m
FT-TCT2 FT-TCT7 FT-TCT11		Twill woven			
Features	FRP Cloth is a semi-finished material primarily used as an enhancement substrate. When combined with resin, it transfers its superior properties—such as high strength, corrosion resistance, and insulation—to final products. As one of the most versatile, fundamental, and critical materials in fiber-reinforced plastic manufacturing, it enables the transformation from soft fabrics to rigid, high-strength structures.				
Application	Naval and Marine Engineering: Used to manufacture hull, deck, hatch cover, etc., to provide hull structure strength and corrosion resistance to seawater.				
	Automotive industry: Used to manufacture body panels, bumpers, truck cabs, etc., to achieve lightweight and complex shapes.				
	Wind energy: In the manufacturing of wind turbine blades, the skin, which is formed with the core material, bears a great wind load.				
	Construction and building materials: Used for FRP skylight, cooling tower shell, sculpture, architectural decorative components, etc.				
	Chemical anticorrosion: Used for on-site winding to make large storage tanks, pipelines, or anticorrosive lining treatment of metal structures.				

Application Scenarios

1.Naval and Marine Engineering: Used to manufacture hull, deck, hatch cover, etc., to provide hull structure strength and corrosion resistance to seawater.

2.Automotive industry: Used to manufacture body panels, bumpers, truck cabs, etc., to achieve lightweight and complex shapes.

3.Wind energy: In the manufacturing of wind turbine blades, the skin, which is formed with the core material, bears a great wind load.

4.Construction and building materials: Used for FRP skylight, cooling tower shell, sculpture, architectural decorative components, etc.

5.Chemical anticorrosion: Used for on-site winding to make large storage tanks, pipelines, or anticorrosive lining treatment of metal structures.

www.hbfortis.com
whatsapp:+86 18032662725

Customized services

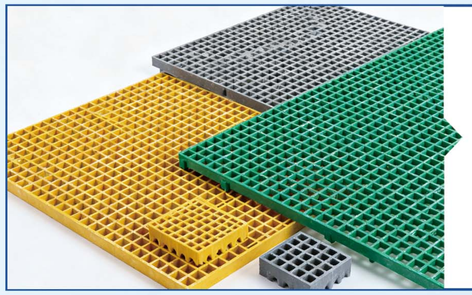

Product customization 01

Customization of size, performance, materials and connection methods is provided to adapt to the needs of different scenarios.

Design customization 02

Covering working condition adaptation design, drawing samples and exclusive mold services to ensure adaptability.

Painting customization 03

Functional coatings, colors and processes can be customized to take into account both protection and beauty.

Packaging customization 04

Provide graded protection, logo and packaging form customization to ensure delivery quality.

Transport

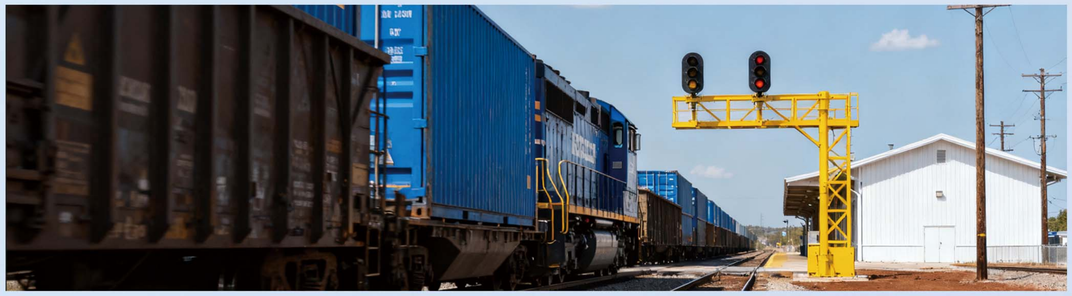

www.hbfortis.com
whatsapp +86 18932662725